Ideal Standard

GUSTO

BD548J4

Pull-out spout

Image & drawing

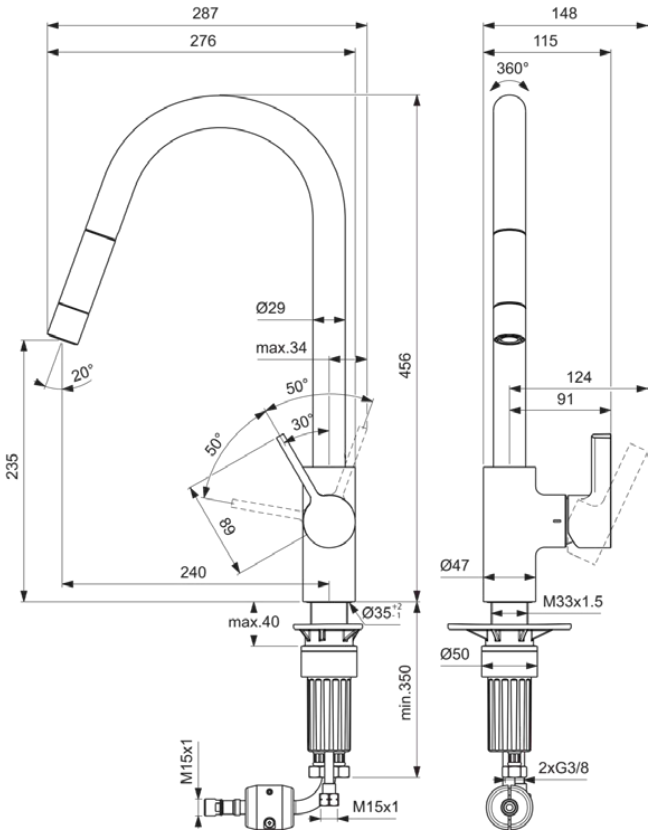

General information

Product type:	Spare parts
Sub product type:	Pull-out spout
Brand:	Ideal Standard
Suite name:	GUSTO
Designer:	Palomba Serafini Associati
Colour:	J4 - Brushed Copper
Surface finish effect:	satin
Height (mm):	456
Width (mm):	148
Length / Projection (mm):	287
Fixing method:	Shank fixation
Net weight (kg):	3.23
EAN code:	3800861113461

Features

- Hidden aerator
- FirmaFlow
- PVD technology

Downloads

- Spare Parts List

Product standard & certifications

Additional standards:	EN 248 | DIN 4109 | EN 817

Product specifications

Adjustable spray mode:	No
Amount of handles:	1
Amount of spray modes:	1
Blue Start technology:	No
Colour code:	J4
Colour description:	brushed copper
Cool Body technology:	No
Easy Fix technology:	No
FirmaFlow cartridge:	Yes
Handle position:	Lateral
Low-pressure model:	No
Material:	Metal
Material quality:	Brass
Max. flow rate at 3 bar (l):	4.5
Max. flow rate at 3 bar (l) for all outlets:	4.5

Every effort is made to ensure that the information provided is accurate. However, we cannot guarantee this, and accept no liability for any incorrect information.

GUSTO

BD548J4

Pull-out spout

Product specifications

Max. flow rate at 3 bar (l) for spout:	4.5
PVD technology:	Yes
Pre-window installation:	No
Spout model:	Swivel
Spout type:	Tubular
Surface cover:	plated
Surface finish effect:	satin
Swivelling spout:	Yes
Tap outlet model:	Aerator
Tap outlet visibility:	Hidden
Temperature limiter:	Yes
Type of handle:	Lever
Type of spray mode(s):	Rain
Type of temperature control:	Manually operated
With escutcheon(s):	No
With handle(s):	Yes
With outlet:	Yes
With pull-out spray:	Yes
Fixing method:	Shank fixation
Mounting method:	Tap hole

Every effort is made to ensure that the information provided is accurate. However, we cannot guarantee this, and accept no liability for any incorrect information.

Ideal Standard

Your local contact:

België • Belgique
Ideal Standard Produktions-GmbH
Corporate Village - Frame 21 Building
Da Vincilaan 2
B-1935 Zaventem
✆ +32 2 325 66 00
🖷 +32 2 325 66 01
www.idealstandard.be

Éire
Ideal Standard Éire
2nd Floor, Unit 3103 Lake Drive Citywest
Business Campus Tallaght Dublin 24 YXW2
✆ +353 1 4564525
www.idealstandard.ie

Österreich
Ideal Standard GmbH
Zweigniederlassung Österreich
Erzherzog-Karl-Str. 131–135
1220 Wien Österreich
✆ +43 125 66 222-0
🖷 +43 125 66 222-625
www.idealstandard.at

България
Идеал Стандарт - Видима АД
ул. "Марин Попов" 53
гр. Севлиево, 5400
✆ +359 885 938 880
✉ office@idealstandard.com
www.idealstandard.bg

España
Ideal Standard Iberia S.L.U
Riera Principal Nr. 8
08328 Alella (Barcelona - España)
✆ +34 93 561 80 00
www.idealstandard.es

Polska
Ideal Standard Polska
Ul, Ostrowskiego 7
53-238 Wroclaw
✆ +48 71 78 68 301
www.idealstandard.po

Česká republika
Ideal Standard s.r.o.
Zemska 623
41574 Teplice
✆ +420 (0)-417-265 11
🖷 +420 (0)-417-265 15
www.idealstandard.cz

Ελλάδα
Ideal Standard S. A. Γραφεία Αθηνών:
Λ. Μεσογείων 265, 15451 N.
Ψυχικό, Αθήνα
✆ +2106790800
www.idealstandard.gr

România
Ideal Standard Representative Office România
Calea Victoriei 109, Etaj 1, Sector 1
București, 010069
✆ +40 746 050 408
✉ officebucharest@idealstandard.com
www.ideal-standard.ro

Hrvatska
Ideal Standard Hrvatska
Lopatinečka ul. 8
10000, Zagreb
✆ +385 91 229 9304
www.idealstandard.hr

France
Ideal Standard France - Siège social
39Rue St. Sabin
75011 Paris
✆ +33 (0)1 49 38 81 34
✉ sav.idealstandard@idealstandard.com
(demandes techniques) /
devis.chantier@idealstandard.com
(demandes commerciales)
www.idealstandard.fr

Srbija
Ideal Standard - Vidima AD
Drinčićeva br.19, I sprat, stan br.8
11000 Beograd Srbija
✆ +381 11 7138 058
www.idealstandard.rs

Danmark
Ideal Standard Skandinavia ApS
Fynsvej 9
5500 Middelfart (Denmark)
✆ +45 75 84 10 10
www.idealstandard.dk

Italia
Ideal Standard (Italia) Srl
Via Giosuè Borsi 9
20143 Milano, Italia
✆ +39 (0)2 28881
✉ info@idealstandard.it
www.idealstandard.it

United Kingdom
Ideal Standard (UK) Ltd
The Bathroom Works National Avenue
Kingston Upon Hull
HU5 4HS
✆ +44 (0)-1482 346 461
🖷 +44 (0)-1482 445 886
www.idealstandard.co.uk

Deutschland
Ideal Standard GmbH
Euskirchener Straße 80
53121 Bonn
✆ +49 (0)228 521-0
🖷 +49 (0)228 521-241
✉ idealstandard.de@idealstandard.com
www.idealstandard.de

Nederland
Ideal Standard Nederland BV
Hambakenwetering 3
5231 DD 's-Hertogenbosch
✆ +31 (0)-77 355 08 08
🖷 +31 (0)-77 354 21 86
www.idealstandard.nl

Every effort is made to ensure that the information provided is accurate. However, we cannot guarantee this, and accept no liability for any incorrect information.