Ideal Standard

IPALYSS

E1413V4

IPALYSS | Vessel 400x400x145 mm in kashmir finish, no tap hole, with overflow | Diamatec, Space saving basin

Image & drawing

Ideal Standard

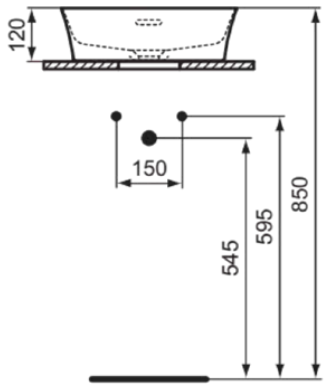

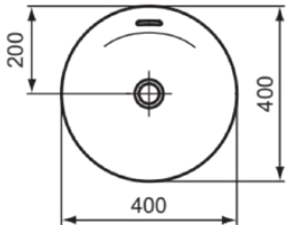

General information

Product type:	Washbasins
Sub product type:	Vessel
Brand:	Ideal Standard
Suite name:	IPALYSS
Designer:	Studio Levien
Colour:	V4 - Kashmir
Surface finish effect:	satin
Height (mm):	145
Width (mm):	400
Length / Projection (mm):	400
Net weight (kg):	7.50
EAN code:	5017830542773

Included products

D570967: EXPRESSION | Fixing set in neutral finish

Features

Diamatec

Space saving basin

Downloads

- Installation Guide

Product standard & certifications

Additional standards:	EN 14688
DoP classification:	CL00

Product specifications

Colour code:	V4
Colour description:	kashmir
Diamatec Technology:	Yes
Grinded back side:	No
Grinded bottom side:	Yes
Disabled model:	No
Includes a chain eye:	No
Material:	Ceramic
Material quality:	Diamatec
Amount of tap holes for each washbasin:	0
Amount of washbasins:	1
Overflow visible:	Yes
PVD technology:	No
Support plateau:	None
Surface finish effect:	satin

Every effort is made to ensure that the information provided is accurate. However, we cannot guarantee this, and accept no liability for any incorrect information.

IPALYSS

E1413V4

IPALYSS | Vessel 400x400x145 mm in kashmir finish, no tap hole, with overflow | Diamatec, Space saving basin

Product specifications

Type of overflow:	Slotted
With back wall:	No
With drain plug:	No
With overflow:	Yes
With siphon:	No
Mounting method:	On-furniture

Every effort is made to ensure that the information provided is accurate. However, we cannot guarantee this, and accept no liability for any incorrect information.

Ideal Standard

Your local contact:

België • Belgique
Ideal Standard Produktions-GmbH
Corporate Village - Frame 21 Building
Da Vincilaan 2
B-1935 Zaventem
✆ +32 2 325 66 00
🖷 +32 2 325 66 01
www.idealstandard.be

Éire
Ideal Standard Éire
2nd Floor, Unit 3103 Lake Drive Citywest
Business Campus Tallaght Dublin 24 YXW2
✆ +353 1 4564525
www.idealstandard.ie

Österreich
Ideal Standard GmbH
Zweigniederlassung Österreich
Erzherzog-Karl-Str. 131–135
1220 Wien Österreich
✆ +43 125 66 222-0
🖷 +43 125 66 222-625
www.idealstandard.at

България
Идеал Стандарт - Видима АД
ул. "Марин Попов" 53
гр. Севлиево, 5400
✆ +359 885 938 880
✉ office@idealstandard.com
www.idealstandard.bg

España
Ideal Standard Iberia S.L.U
Riera Principal Nr. 8
08328 Alella (Barcelona - España)
✆ +34 93 561 80 00
www.idealstandard.es

Polska
Ideal Standard Polska
Ul, Ostrowskiego 7
53-238 Wroclaw
✆ +48 71 78 68 301
www.idealstandard.po

Česká republika
Ideal Standard s.r.o.
Zemska 623
41574 Teplice
✆ +420 (0)-417-265 11
🖷 +420 (0)-417-265 15
www.idealstandard.cz

Ελλάδα
Ideal Standard S. A. Γραφεία Αθηνών:
Λ. Μεσογείων 265, 15451 N.
Ψυχικό, Αθήνα
✆ +2106790800
www.idealstandard.gr

România
Ideal Standard Representative Office România
Calea Victoriei 109, Etaj 1, Sector 1
București, 010069
✆ +40 746 050 408
✉ officebucharest@idealstandard.com
www.ideal-standard.ro

Hrvatska
Ideal Standard Hrvatska
Lopatinečka ul. 8
10000, Zagreb
✆ +385 91 229 9304
www.idealstandard.hr

France
Ideal Standard France - Siège social
39Rue St. Sabin
75011 Paris
✆ +33 (0)1 49 38 81 34
✉ sav.idealstandard@idealstandard.com
(demandes techniques) /
devis.chantier@idealstandard.com
(demandes commerciales)
www.idealstandard.fr

Srbija
Ideal Standard - Vidima AD
Drinčićeva br.19, I sprat, stan br.8
11000 Beograd Srbija
✆ +381 11 7138 058
www.idealstandard.rs

Danmark
Ideal Standard Skandinavia ApS
Fynsvej 9
5500 Middelfart (Denmark)
✆ +45 75 84 10 10
www.idealstandard.dk

Italia
Ideal Standard (Italia) Srl
Via Giosuè Borsi 9
20143 Milano, Italia
✆ +39 (0)2 28881
✉ info@idealstandard.it
www.idealstandard.it

United Kingdom
Ideal Standard (UK) Ltd
The Bathroom Works National Avenue
Kingston Upon Hull
HU5 4HS
✆ +44 (0)-1482 346 461
🖷 +44 (0)-1482 445 886
www.idealstandard.co.uk

Deutschland
Ideal Standard GmbH
Euskirchener Straße 80
53121 Bonn
✆ +49 (0)228 521-0
🖷 +49 (0)228 521-241
✉ idealstandard.de@idealstandard.com
www.idealstandard.de

Nederland
Ideal Standard Nederland BV
Hambakenwetering 3
5231 DD 's-Hertogenbosch
✆ +31 (0)-77 355 08 08
🖷 +31 (0)-77 354 21 86
www.idealstandard.nl

Every effort is made to ensure that the information provided is accurate. However, we cannot guarantee this, and accept no liability for any incorrect information.