Ideal Standard

CONNECT AIR

E234301

CONNECT AIR | Wall-hung bowl 365x545x350 mm in white glossy finish, horizontal outlet | AquaBlade

Image & drawing

Ideal Standard

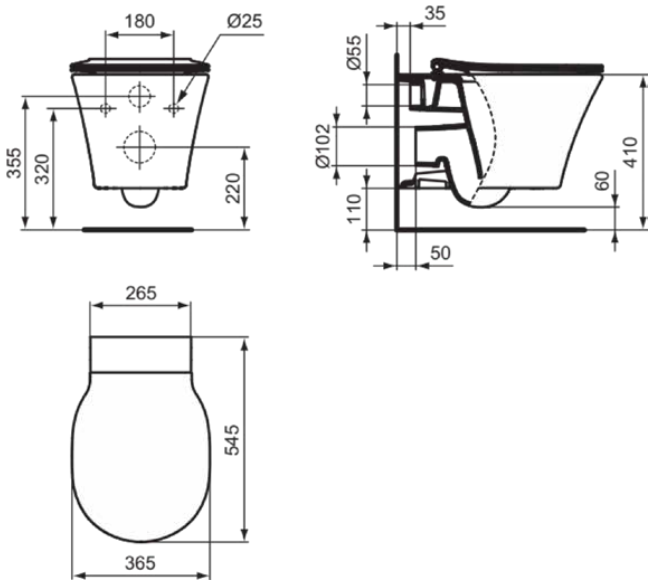

General information

Sub product type	Wall-hung bowl
Brand	Ideal Standard
Suite name	CONNECT AIR
Designer	Studio Levien
Colour code	01
Colour description	White Glossy
Surface finish effect	glossy
Height (mm)	350
Width (mm)	365
Length / Projection (mm)	545
Fixing method	Fixing bolts
EAN code	5017830553434
Net weight (kg)	22.36

Features

AquaBlade

Downloads

- EPD

Product specifications

Disabled model	No
Raised model	No
Material	ceramic
Material quality	Vitreous china
Outlet visibility	Concealed
PVD technology	No
IdealPlus technology	No
Type of flushing	Washdown
Outlet location	Middle
Outlet orientation	Horizontal
Position of water supply	Rear
Type of water supply	Concealed
With hygienic recess / fixed toilet seat	No
Children's model	No

Every effort is made to ensure that the information provided is accurate. However, we cannot guarantee this, and accept no liability for any incorrect information.

Ideal Standard

Your local contact

België • Belgique
Ideal Standard Produktions GmbH
Ikaroslaan 18
B-1930 Zaventem
✆ +32 2 325 66 00
+32 2 325 66 01
www.idealstandard.be

Éire
Ideal Standard Éire
2nd Floor, Unit 3103 Lake Drive Citywest
Business Campus Tallaght Dublin 24 YXW2
✆ +353 1 4564525
www.idealstandard.ie

Österreich
Ideal Standard GmbH
Zweigniederlassung Österreich
Erzherzog-Karl-Str. 131–135
1220 Wien Österreich
✆ +43 125 66 222-0
+43 125 66 222-625
www.idealstandard.at

България
Идеал Стандарт - Видима АД
ул. "Марин Попов" 53
гр. Севлиево, 5400
✆ +359 885 938 880
✉ office@idealstandard.com
www.idealstandard.bg

España
Ideal Standard Iberia S.L.U
Riera Principal Nr. 8
08328 Alella (Barcelona - España)
✆ +34 93 561 80 00
www.idealstandard.es

Polska
Ideal Standard Polska
Ul, Ostrowskiego 7
53-238 Wroclaw
✆ +48 71 78 68 301
www.idealstandard.po

Česká republika
Ideal Standard s.r.o.
Zemska 623
41574 Teplice
✆ +420 (0)-417-265 11
+420 (0)-417-265 15
www.idealstandard.cz

Ελλάδα
Ideal Standard S. A. Γραφεία Αθηνών:
Λ. Μεσογείων 265, 15451 N.
Ψυχικό, Αθήνα
✆ +2106790800
www.idealstandard.gr

România
Ideal Standard Representative Office România
Calea Victoriei 109, Etaj 1, Sector 1
București, 010069
✆ +40 746 050 408
✉ officebucharest@idealstandard.com
www.ideal-standard.ro

Hrvatska
Ideal Standard Hrvatska
Lopatinečka ul. 8
10000, Zagreb
✆ +385 91 229 9304
www.idealstandard.hr

France
Ideal Standard France - Siège social
39Rue St. Sabin
75011 Paris
✆ +33 (0)1 49 38 81 34
✉ sav.idealstandard@idealstandard.com
(demandes techniques) /
devis.chantier@idealstandard.com
(demandes commerciales)
www.idealstandard.fr

Srbija
Ideal Standard - Vidima AD
Drinčićeva br.19, I sprat, stan br.8
11000 Beograd Srbija
✆ +381 11 7138 058
www.idealstandard.rs

Danmark
Ideal Standard Skandinavia AS
Tulipvij 1
7100 Vejle (Denmark)
✆ +45 758 410 10
+45 758 410 24
www.idealstandard.dk

Italia
Ideal Standard (Italia) Srl
Via Giosuè Borsi 9
20143 Milano, Italia
✆ +39 (0)2 28881
✉ info@idealstandard.it
www.idealstandard.it

United Kingdom
Ideal Standard (UK) Ltd
The Bathroom Works National Avenue
Kingston Upon Hull
HU5 4HS
✆ +44 (0)-1482 346 461
+44 (0)-1482 445 886
www.idealstandard.co.uk

Deutschland
Ideal Standard GmbH
Euskirchener Straße 80
53121 Bonn
✆ +49 (0)228 521-0
+49 (0)228 521-241
✉ idealstandard.de@idealstandard.com
ww.idealstandard.de

Nederland
Ideal Standard Nederland
L. J. Costerstraat 30 - Postbus 7
5900 AA Venlo
✆ +31 (0)-77 355 08 08
+31 (0)-77 354 21 86
www.idealstandard.nl