SPARE PARTS

S332567

Cistern
Pneumatic; SF; BI/TI

CONCEALA 3

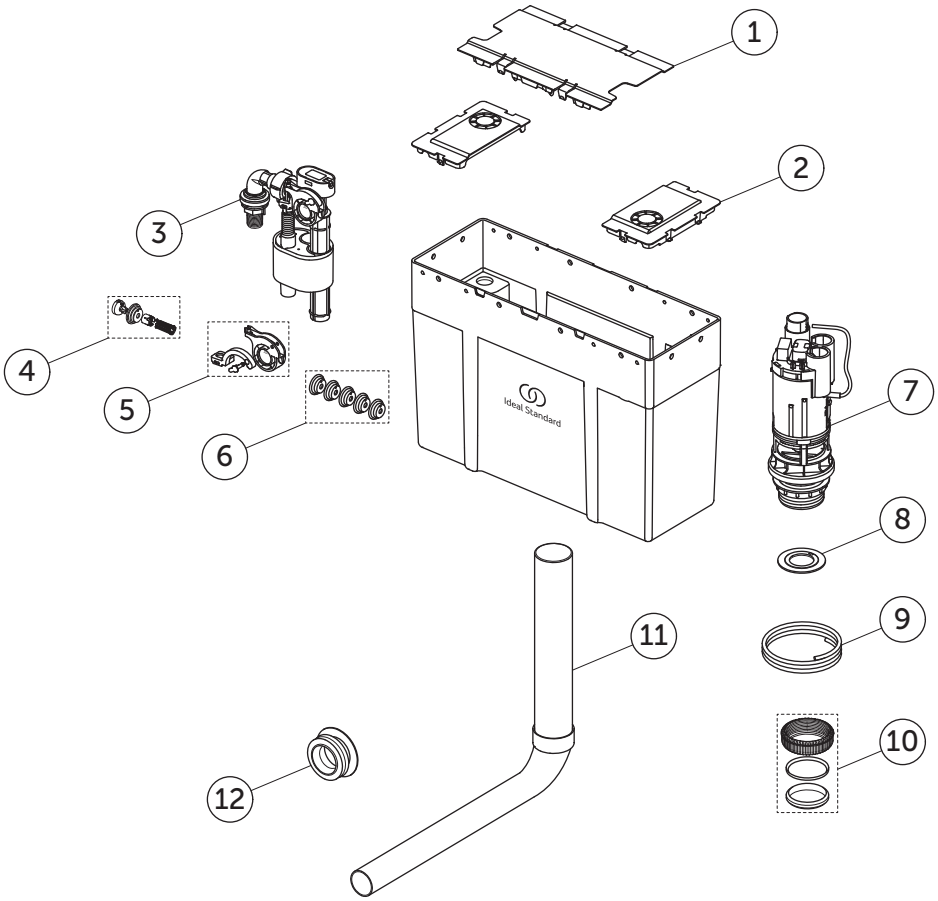

Item	Description	Spare Code
1	SP CONC3 LID CENTRE TOP ACCESS	EW21267
2	SP CONC3 LID SIDE TOP INLET	EW21367
3	SP CONC3 SIV C/W T&BI ELBOW	EW21567
4	SET DIAPHRAGM + FLTR FOR SIV UK (B1)	EW19867
5	SET PLASTIC PARTS FOR INLET	EW20167
6	SET DIAPHRAGM x 5 PCS (B1)	EW20267
7	SP CONC3 SINGLE FLUSH PNEU VALVE & CAGE	EW21767
8	SP CONC3 PNEUMATIC OUTLET VALVE SEAL	EW21867
9	SP CONC3 PNEUMATIC HOSE 2.5M x 2 (O1)	R019667
10	SP CONC3 OUTLET CONNECTION PACK	EW22167
11	SP CONC3 FLUSH PIPE 2" > 1.5" SHARP	EW22467
12	SP WC INLET CONNECTOR SIMPLA	S450567

Ideal Standard International NV
Corporate Village – Gent Building
Da Vincilaan 2
B1935 – Zaventem
Belgium

BE +32 (02) 325 66 33
BG +359 675 30362
DE +49 (0)228 521 580
EG +202 26969700
FR +33 (0)1 49 38 28 00
GB 01482 496 318
GR +30 210 67 90 810
HR +38591 22 99 304
HU +36 30 6991 594
IT 800 652 290
ME +971 4 804 2400
NL +31 (077) 355 08 08
PL +48 71 7868 301/302
RO +40 21 3223 201/202
SI 00386 59 919040
TR +90 216 314 87 87
UA +359 675 30 468
AL/XK/BA +359 887 709 696
CZ/SK +420 417 592 179
DK/NO/SE +45 75 84 10 10
ES/PT +34 93 561 80 00
LV/LT/EE +371 673 57 792
RS/MK/ME +381 11 713 80 58
RU/MD +7 495 669 23 11

Ideal Standard